LTR	DESCRIPTION	DATE	APPROVED
		12/3/97	

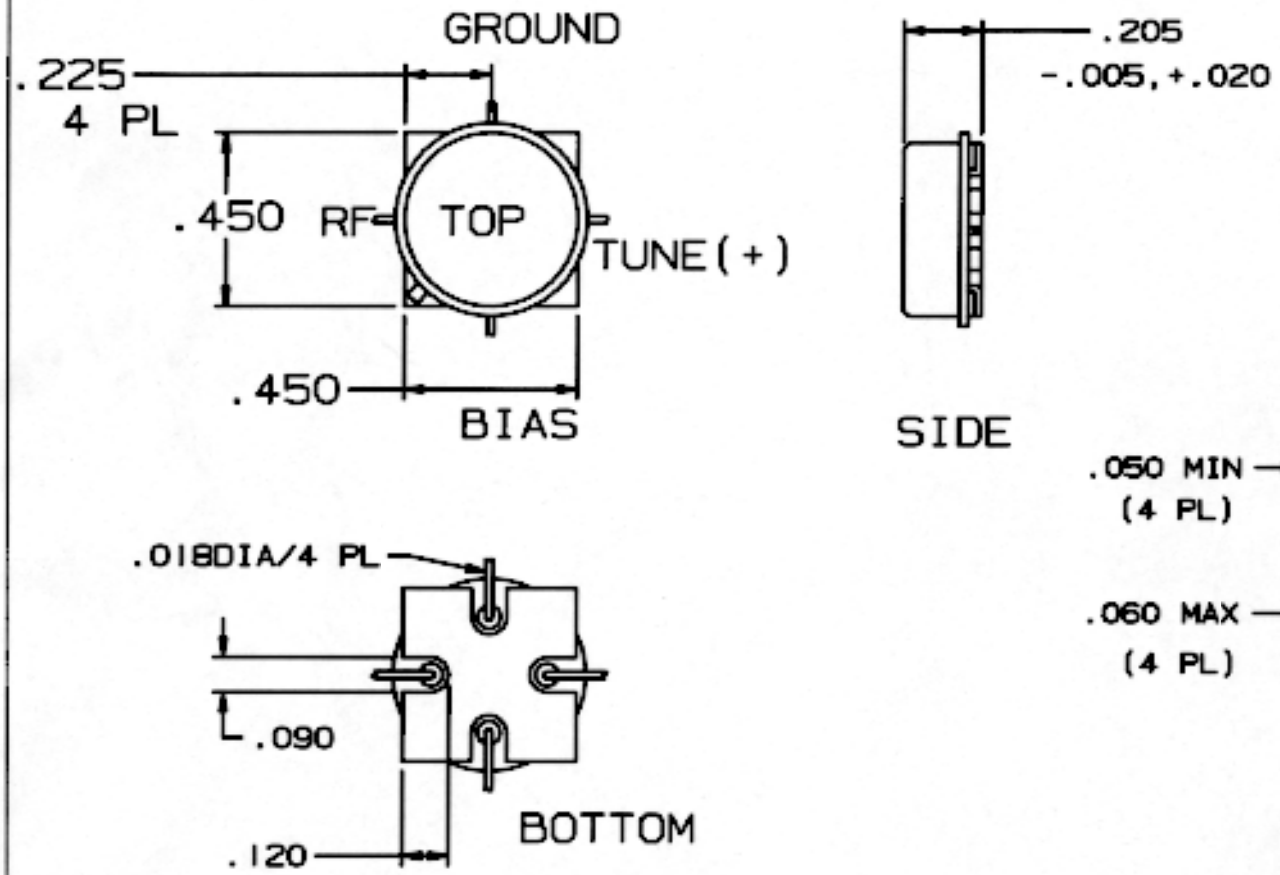

PACKAGE TYPE C

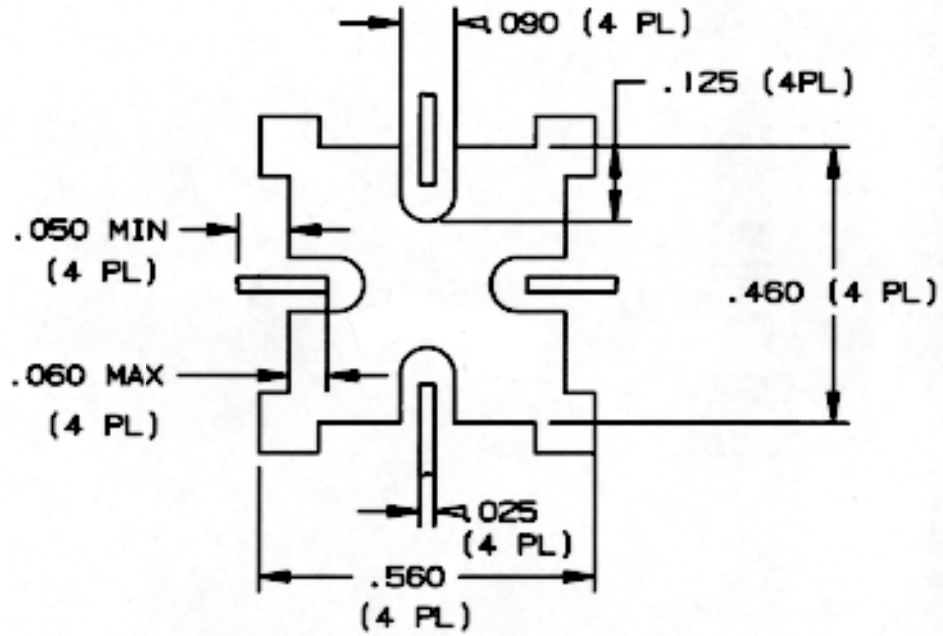

RECOMMENDED MOUNTING FOOTPRINT LAYOUT

			APPROVALS	DATE
			DRAWN RJF	7/21/98
		MATERIAL	CHECKED	
		FINISH		
NEXT ASSY	USED ON			

SPINNAKER MICROWAVE

SURFACE MOUNT TO-8 PACKAGE AND FOOTPRINT

CODE IDENT NO.	DRAWING NO	REV
SCALE		SHEET 1 OF 1