LTR	DESCRIPTION	DATE	APPROVED
		12/3/97	

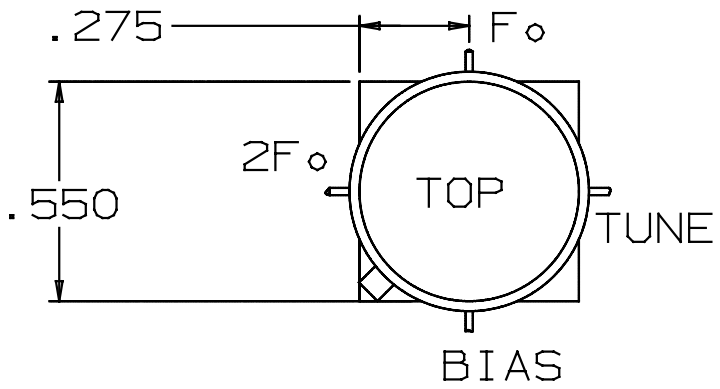

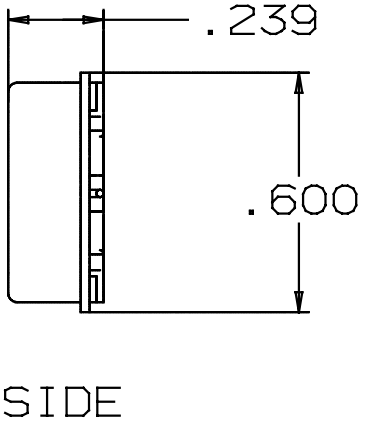

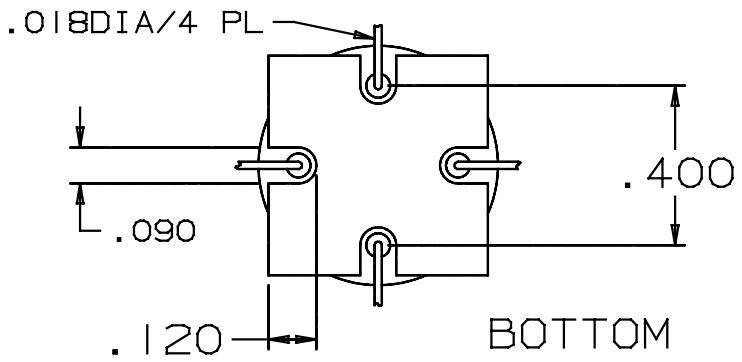

NOTE:
MAX LEAD PROTRUSION
WILL BE .125 INCHES

NEXT ASSY	USED ON	MATERIAL	APPROVALS	DATE
			DRAWN RJF	12/3/97
			CHECKED	
		FINISH		

SPINNAKER MICROWAVE

PLANAR PKG
4 PORT TO8B

CODE IDENT NO.	DRAWING NO	REV
SCALE		SHEET 1 OF 1